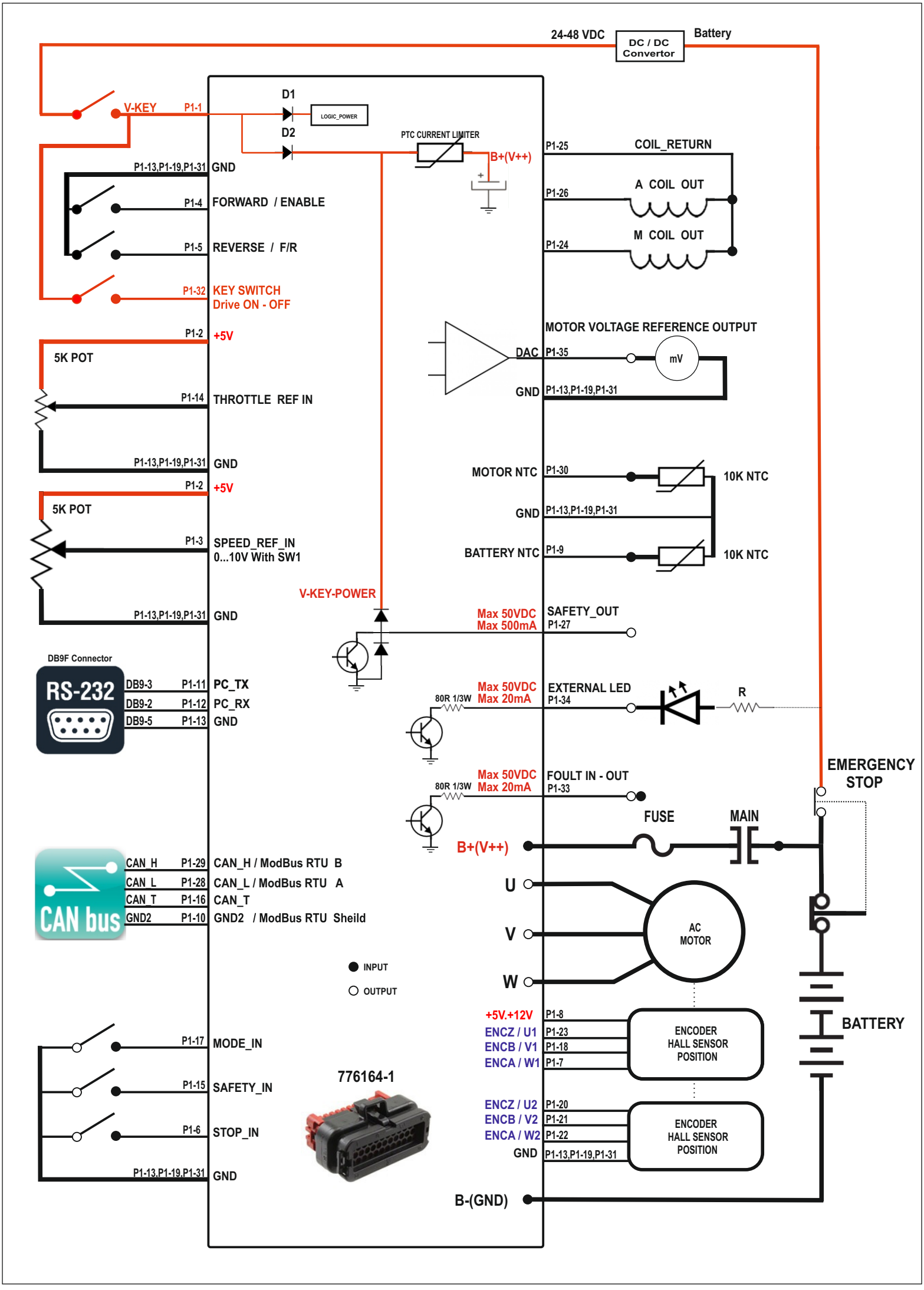TULPAR300 CONNECTOR WIRING STANDARD CONFIGURATION