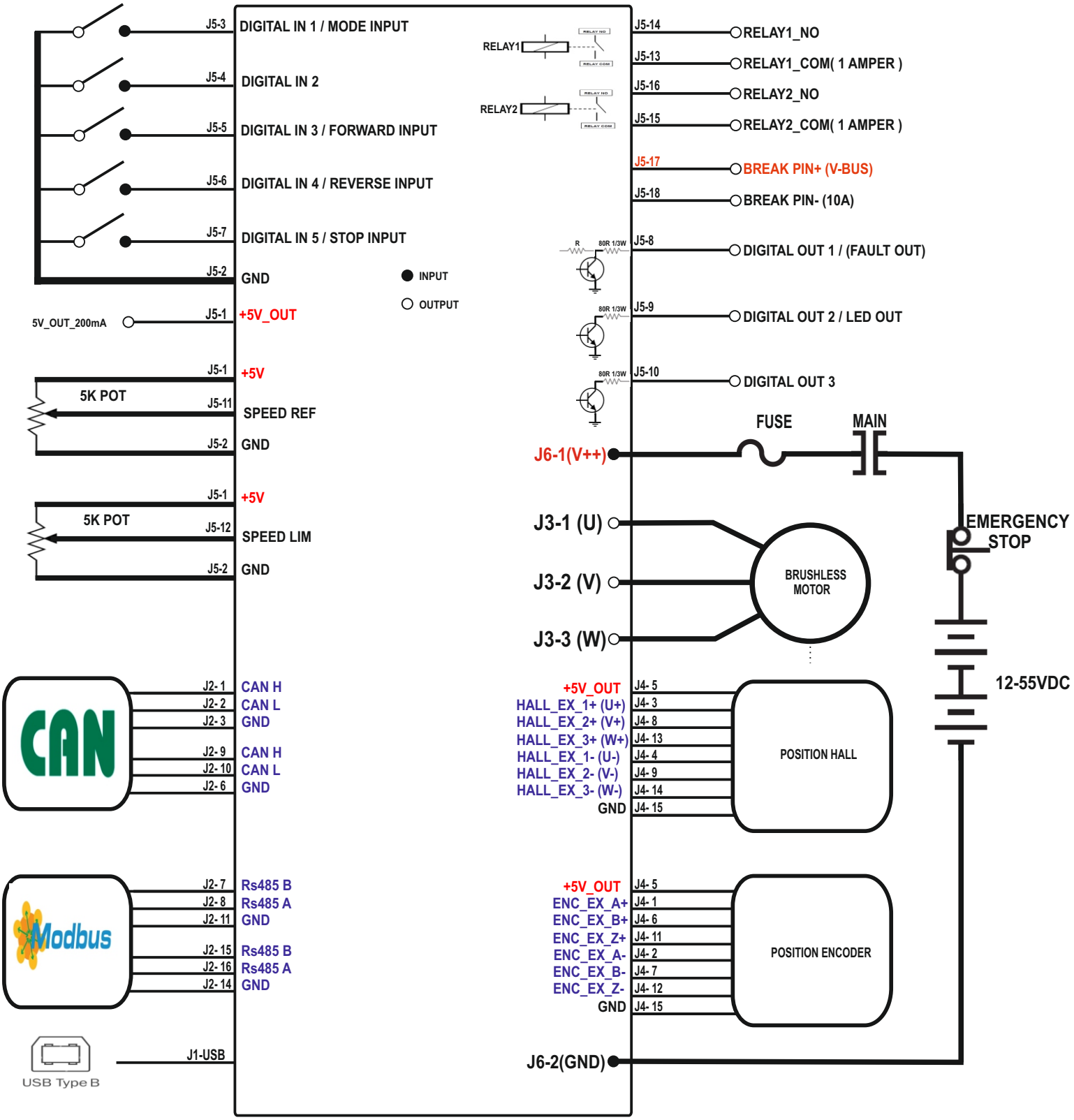TULPAR_100 CONNECTOR WIRING STANDARD CONFIGURATION